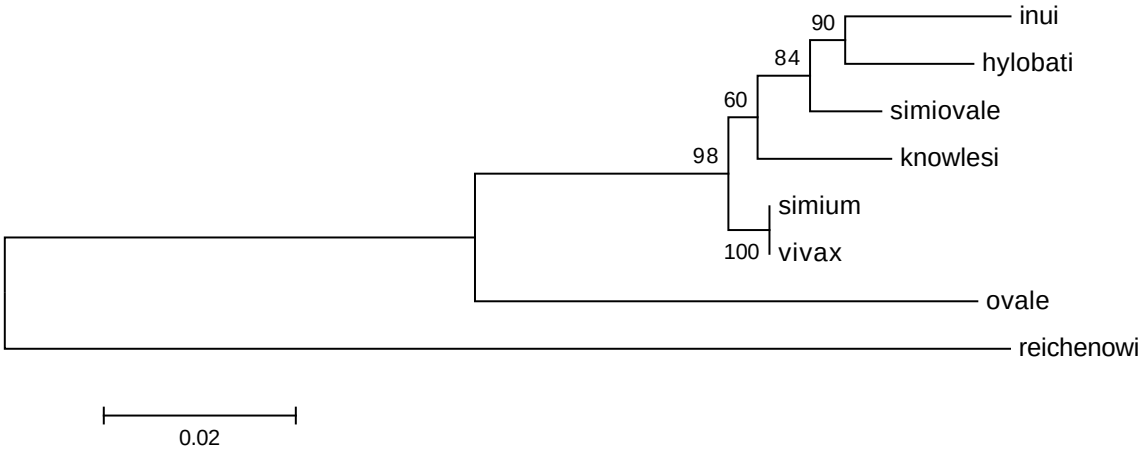
90
84
60
98
100
inui
hylobati
simiovale
knowlesi
simium
vivax
ovale
reichenowi
0.02